Variable angle bevelling machine with automatic feed

UZ47 Skillmaster

Instruction manual and maintenance guide

CE

A copy of this manual is supplied with every edge chamfering machine. All rights reserved.
No part of this publication may be reproduced without the prior consent of N.KO

Contents

1. General Information 3.
2. Safety 6
3. Technical Specifications 9
4. Installation 11
5. Usage 14
6. Application 20
7. Machining 27
8. Maintenance and adjustment 28
9. Spare parts 32

1. General information

1.1. Introduction

Thank you for purchasing one of our machines. We hope you will be completely satisfied with it.

This manual contains all the instructions for installing, adjusting, operating, and maintaining the UZ47 Skillmaster machine.
in accordance with applicable safety standards.

The information and data in this manual are subject to change as a result of further improvements to the machines. For the avoidance of doubt, please contact N.KO if you find any discrepancies.

Never perform any operations on the machine before you have read and understood the instructions in the manual. A large proportion of accidents in the workplace are caused by failure to follow the instructions and recommendations contained in the manual.

Graphic symbols in the manual are used to highlight important information regarding safety and machine operation.

Caution:
Important information for the personal safety of the operator.

Important:
Instruction that must be followed to ensure proper operation of the machine.

1.2. Tests

The edge beveling machine is tested in our technical testing laboratory.
During this test, the correct functioning of the electrical system and the correct functioning of the chamfering of sheets and profiles of various types and sizes are tested.

1.3. Warranty

The seller provides a warranty for the UZ47 Skillmaster miter saw system that the goods will be free from material and manufacturing defects for a period of 12 months from the date of delivery.
A warranty for the proper functioning of the goods and the materials used is provided for a period of 12 months from the date of delivery of the goods.

The seller undertakes to ensure the removal of any defects covered by the warranty free of charge and without undue delay so that the buyer can use the goods properly. If the buyer exercises their rights arising from liability for defects not covered by the warranty, they shall reimburse the seller for the costs associated with this.

The warranty period does not run from the date on which the buyer reported to the seller the existence of a defect covered by the warranty and for which the buyer cannot use the goods and exercised their rights arising from liability for defects under the warranty provided, until the date of its removal by the seller.

The warranty does not cover natural and normal wear and tear of the goods and defects caused by improper use of the goods contrary to the training and documentation provided. Furthermore, the warranty does not cover defects caused by overloading the goods, nor defects caused by unprofessional intervention in the goods or unprofessional repair or modification of the goods. Improper intervention, repair, or modification means any intervention, repair, or modification that was performed contrary to the training and documentation provided, or was performed by a person other than the seller or a person authorized or approved by the seller.

Rights arising from liability for defects under the warranty must be exercised with the seller without undue delay after the buyer discovers the defect, but no later than the end of the warranty period, otherwise these rights shall expire.

To exercise rights arising from liability for defects under the warranty provided, the warranty certificate must be presented. Otherwise, these rights cannot be granted to the buyer.

The seller's liability for defects covered by the warranty does not arise if these defects were caused by external events after the transfer of the risk of damage to the goods. External events include, in particular, natural disasters, force majeure, or the behavior of third parties.

N.KO. considers the warranty to be invalid in the event of:
- inappropriate use of the machine;
- use contrary to national or international standards;
- incorrect installation;
- defective power supply;
- serious maintenance deficiencies;
- unauthorized modifications and/or interventions;
- use of non-original or incorrect spare parts and accessories for the model in question;
- complete or partial failure to follow instructions;
- exceptional events, natural disasters, or other events.

1.4. Identification data

The identification details of the edge chamfering machine are indicated on the aluminum CE label attached to the bearing housing at the top.

1.5. Reference standards (CE Declaration of Conformity)

EU Declaration of Conformity

(EU Declaration of Conformity)

Manufacturer:

N.KO spol. s r.o.
Address: Táborská 398/22, 29301 Mladá Boleslav, Czech Republic ICQ: 26161109

Product:

Machine name / Model: Mobile machine tool for beveling sheet metal
Type / Model: UZ47 Skillmaster
Serial number: see machine nameplate

We declare that the product complies with the provisions of the following EU directives:

- 2006/42/EC – Machinery Directive
- 2014/30/EU – Electromagnetic Compatibility Directive (EMC Directive)
- 2014/35/EU – Low Voltage Directive

Harmonized standards:

- EN ISO 12100:2010 – Safety of machinery, general principles for design
- EN 60204-1:2018 – Electrical equipment of machines
- EN ISO 13849-1:2015 – Safety of machinery – Safety-related control systems
- EN 55014-1 and EN 55014-2 – EMC standards for machines with electric motors

Place and date of issue:

Mladá Boleslav, August 12, 2025

Name and position of responsible person:

Milan Richtr CEO

Podpis: _____

2. SAFETY

2.1 Safety recommendations

Caution:
Read the following instructions carefully to prevent personal injury and/or damage to property.

- Never attempt to operate the machine until you are thoroughly familiar with how it works. If you still have doubts after carefully and thoroughly reading this manual, contact N.KO

- Make sure that all technical personnel who are to use and maintain the machine are fully familiar with all relevant safety recommendations.

- The machine must only be transported and installed by specialized personnel in accordance with the instructions in this manual.

- Before starting the machine, the operator must ensure that all safety devices are functional and that all safety guards are in place.

- Never use the machine for purposes other than those specified in the manual. Never process products other than those specified.

- Contact N.KO before using the machine for purposes other than those specified and request permission.

- The voltage values used to power the machine are dangerous: make sure that all connections are made correctly, never perform maintenance or replace parts on the machine when it is connected to a power source, and never make any branches on electrical connections.

- Replace parts considered defective with others recommended by the manufacturer. Never replace with parts other than original parts.

- Never wear clothing or jewelry that could get caught in moving parts. It is advisable to wear safety clothing: shoes with non-slip soles, ear protectors, and safety glasses.

Important:
If any faults occur during the machine's service life that cannot be repaired according to this manual, it is advisable to contact N.KO so that the problem can be resolved as quickly as possible.

2. Safety stickers

Safety stickers are affixed to the beveling machine to protect the operator. Meaning of the stickers:

This sticker is affixed to the electrical panel of the edge beveling machine and indicates the presence of high voltage.

Do not remove this sticker from the machine.

3. Operator qualification and protection

The employer is obliged to inform the operator about safety standards and, in addition, to ensure that they are observed and to make sure that the work area is sufficiently large and well lit.

The term "operator" refers to a person who installs, operates, adjusts, maintains, cleans, and repairs the machine.

Caution:
Before starting work, operators must be familiar with the characteristics of the machine and must have read this entire manual.

Caution:
The operator must always:

1. Ensure that all safety guards are in place and that safety devices are functioning before starting the machine.
2. Avoid wearing clothing or jewelry that could get caught in moving parts.
3. Wear approved safety clothing, such as shoes with non-slip soles, ear protectors, and safety glasses.
4. Apply safety standards, ensure that they are always observed, and if in doubt, refer to this manual again before taking any action.
5. Contact the machine supplier if you cannot remedy faults that cause the machine to malfunction, if the faults relate to faulty parts or irregularities in operation.

4. Safety devices

The machine is equipped with safety guards to isolate areas that could be dangerous to the operator. These guards are bolted or screwed to the machine structure. They can be removed using the appropriate keys. This operation may be necessary for certain maintenance activities.

Caution:
The cover must always be removed when the machine is at rest with the power plug disconnected. Never use the machine without the safety covers in place.

The machine is equipped with an emergency button for quickly shutting down the machine. It is red in color and will immediately stop the machine, taking precedence over all other operations (position B in Fig. 2.4.1).

This emergency button is used:

- in case of immediate danger or mechanical accident;
- for short interventions when the machine is already at a standstill, in order to carry out

maintenance in this state. Fig. 2.4.1

5. Remaining risks

The machine has been designed and manufactured with all the necessary devices and equipment to ensure the health and safety of the operator.

The machine is completely enclosed to minimize the risk of contact with moving parts.
parts is eliminated as much as possible.

However, there is one remaining risk:

As mentioned above, the working area is protected as much as possible, but it must remain partially open so that material can be inserted for edge trimming.

It is therefore possible that the operator could insert their fingers into this zone, where both the cutting tool and the workpiece holder are located.

⚠ **Caution:**
Always keep your hands as far away from the cutting zone as possible.

⚠ **Caution:**
Always apply the safety regulations contained in the manual and ensure that they are observed and that all remaining risks are eliminated.

3. TECHNICAL SPECIFICATIONS

3.1. Machine description

The UZ47 Skillmaster chamfering machine is compact in size. One of its main features is that the chamfer angle can be adjusted and the material feed is automatic.

The machine is equipped with a milling cutting tool, a robust workpiece holder, a direct reading scale used to set values (bevel size, material thickness setting, and machining angle), and a special guide that facilitates material insertion.

These features allow for easy adjustment of the working angle without replacing any parts and precise control of the bevel size.

The UZ47 Skillmaster beveling machine is reliable and requires minimal maintenance.

3.2 Technical data

<u>Tool drive</u>	
Motor power	**3 kW**
Motor speed	**1445 rpm**
Spindle speed	**Variable**
Tool diameter	**76 mm**
Max width of the bevel	**47**
<u>Feed</u>	
Motor power	**0.4 kW**
Feed range	**0-1.5 m/min (depending on cutting conditions)**
Sheet thickness	**6 ÷ 60 mm**
Clamping	**Automatic**
Angle range	**0°-90° (continuous)**
Total power consumption	**3.4 kW**
Weight	**245 kg**
Dimensions	**See Fig. 3.2.1.**

Max capacity UZ47 Skillmaster				
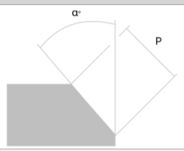	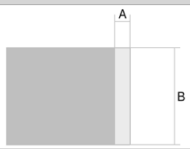	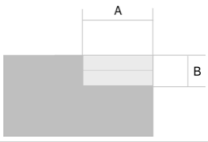		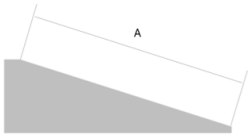
V - Bevel	Facing	Cladding Removal	J - Bevel	Tapering
α°: 0° - 90° P max: 47 mm, (1.85“)	A: 0 - 3 mm B max: 50 mm, (1.96“)	A max: 46 mm, (1.81“) B max: 18 mm, (.7“)	α°: 0° - 90° R6 mm, (R .23“), R8 mm, (R .31“)	A max: 70° 47 mm (1.85“) 75° 46 mm, (1.81“) 80° 45 mm, (1.77“)

Fig. 3.2.1.

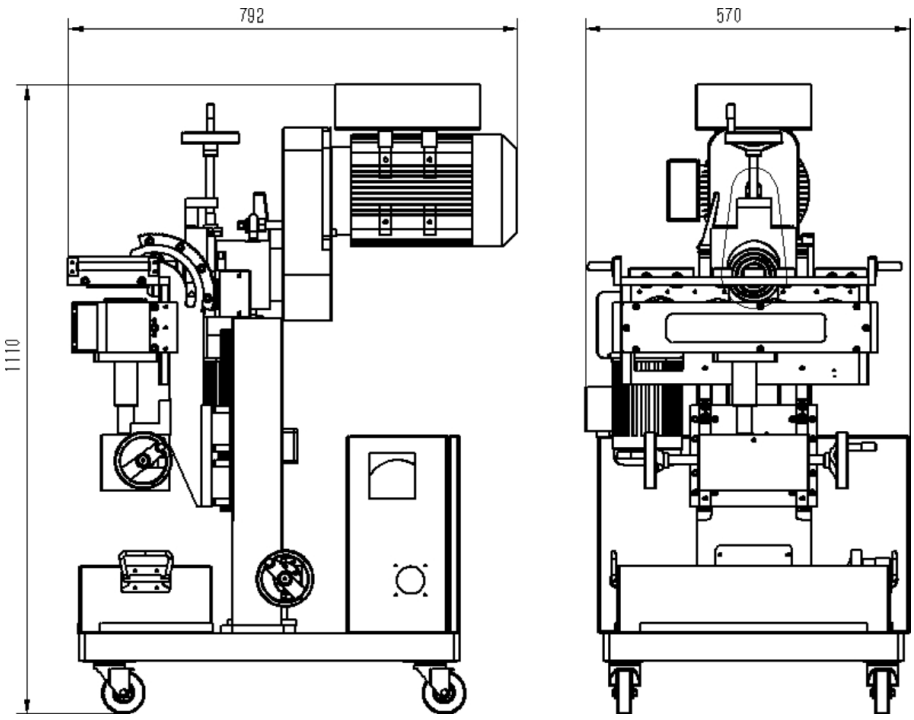

3. Noise level

The machine has been designed and manufactured to minimize noise emissions.

The continuous acoustic noise level according to measurement A exceeded 85 dBA in some cases and operating conditions. The operator must wear hearing protection.

4. Working environment conditions

The environment in which the machine operates must comply with the following values:

Temperature: 0° C - 50° C
Humidity 10% - 90% (non-condensing)

The machine must be placed in a covered location and must not be exposed to rain.
Working conditions other than those listed above could cause serious damage to the machine, especially to the electrical equipment.
When the machine is not in use, it can be stored in a location where the temperature fluctuates between:
-10° C a 70° C

All other values remain unchanged.

4. INSTALLATION

4.1 Transport and lifting

Important:
The activities described in this section must only be performed by qualified personnel.

Suitable unloading and positioning equipment (cranes, forklifts, etc.) must be available at the destination.

When the machine is delivered to the destination, make sure (while the carrier is still present) that it complies with the specifications in the order and that it has not suffered any damage during transport. Immediately inform N.KO and the carrier in detail if damage is found or if parts are missing.

Caution:
Follow these instructions to ensure safe handling of the machine:

- Keep your distance from suspended loads and make sure that the lifting equipment and relevant tools are in perfect working order and are suitable for the weights specified in section 3.2.

- Wear protective clothing such as work gloves, non-slip shoes, and a helmet when handling the machine.

- If the machine is in transport packaging, remove and dispose of it in accordance with the applicable laws of the relevant country.

- If you are lifting the machine with a crane, use suitable textile or chain lifting equipment. The machine is supplied with lifting eyes for easier transport. The eyes are located in the tool box and are mounted in the prepared threaded holes in each corner of the machine base casting.

2. Installation and connection

Important:
The activities described in this paragraph must only be performed by qualified personnel.

If the machine is used for machining small workpieces, it must be set up on a flat surface and secured against movement by the brakes on the transport wheels.

If the machine is used for machining large workpieces, it must be placed on the workpiece itself and must be able to move around the workpiece during operation.

When connecting the power supply, proceed as follows:
The machine is equipped with a 16A, 5-pin plug installed on the body of the electrical switchboard. The machine is equipped with a 16A, 5-pin plug. Use it as the end piece of your power cord if necessary.

3. Checks before commissioning

Important:
Never start the UZ47 Skillmaster without performing the checks described in this section.

Before starting the machine, make sure that it is in good working order by performing the following inspections and checks to achieve maximum efficiency and comply with safety regulations:

- make sure that no screws or other parts are loose;

- make sure that all electrical connections have been made correctly and that the electrical cable is held in place by the cable gland;

To start the machine, proceed as follows:
- Unlock the machine using the red emergency lockable button (position B in Fig. 5.2.1.).
- Turn on the machine using the rotary main switch located on the side of the machine, right next to the power cord plug.
- **Check that the phases are connected correctly. Press the automatic clamping button button** (positions I and H, Fig. 5.2.1.)**. The feed unit must work in accordance with the CLAMPING and RELEASE buttons. When the clamping button is pressed, the feed unit must move upwards and vice versa, when the release button is pressed, the feed unit must move downwards. If the opposite is true, swap the phase wires in the power cord plug.**

4. Destruction and disposal

When disposing of the UZ47 Skillmaster machine, keep in mind that the materials from which it is made are not hazardous and mainly include:

- painted or plated ferritic steel;
- 300/400 series stainless steel;
- plastic material of various types;
- gear oil;
- electric motor;
- electrical cables and associated sheaths;
- electrical monitoring and excitation devices.

Follow this procedure:

- comply with the applicable laws of your country relating to workplace safety;
- disconnect the machine from the power supply;
- Disassemble the machine and sort the parts into groups according to their chemical nature.
- Scrap the machine parts in accordance with the applicable laws of your country.
- Strictly observe applicable occupational safety regulations during the dismantling phases.

5. USE

5.1. Proper use

The UZ47 Skillmaster chamfering machine has been designed, manufactured, and sold for the purpose of chamfering metal workpieces of the following types: **iron, steel**, **stainless steel**, brass, copper, and aluminum. These are primarily sheets, rods, and profiles made of the above-mentioned materials.

The UZ47 Skillmaster is designed for machining common steel, stainless steel, abrasion-resistant materials, and other alloys.
Possible machining applications:

- Chamfering - Preparation of weld surfaces.
- Chamfering of leads. Operations for the purpose of unifying two different sheet thicknesses.
- J bevel - a specific weld edge profile, used mainly to prepare weld surfaces for thicker materials.
- Cladding removal - Removal of a layer of material of a certain width and depth from the edge of the sheet.
- Facing - Removal of a layer of material from the edge of the workpiece at a zero angle.

The sheet must be placed at a height of +/- 830 mm. When processing smaller workpieces, the material is inserted directly into the machine by hand. The minimum length of the machined sheet must be at least 300 mm.

Any other uses other than those described above are considered inappropriate. More specifically, it is prohibited to:

- process products other than those for which the machine is manufactured and sold;
- modify the operation of the machine;
- replacing parts with non-original ones;
- modify electrical connections and thereby bypass internal safety devices;
- remove or modify protective covers;
- use the machine in places where the atmosphere is aggressive.

Caution:
It is strictly forbidden to chamfer edges on materials other than those specified, as processing them could pose a risk to the operator and damage the machine.

Before making any modifications, it is necessary to contact N.KO for approval. If this is not done, N.KO declines all responsibility for any damage that may occur.

5.2. Description of controls

The UZ47 Skillmaster chamfering machine is controlled using controls located on the distribution box, control panel, and other locations throughout the machine.

Fig. 5.2.1.

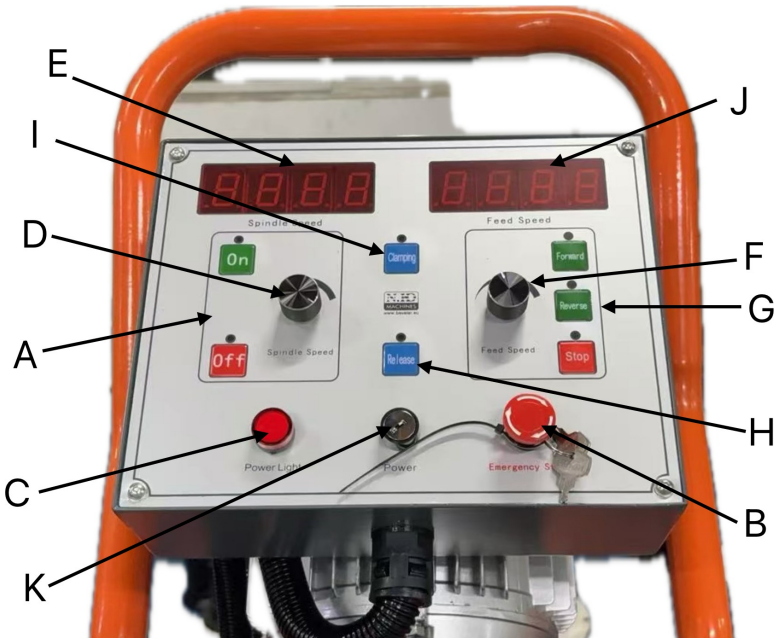

Control panel - Description

A.	Cutter motor start and stop button
B.	Emergency stop switch
C.	Indicator light
D.	Tool speed control
E.	Tool speed display
F.	Machine feed speed control
G.	Start and stop machine feed + reverse feed option
H.	Deactivation of automatic workpiece clamping
I.	Activation of automatic workpiece clamping
J.	Machine feed speed display
K.	Control panel lock

Fig. 5.2.2.

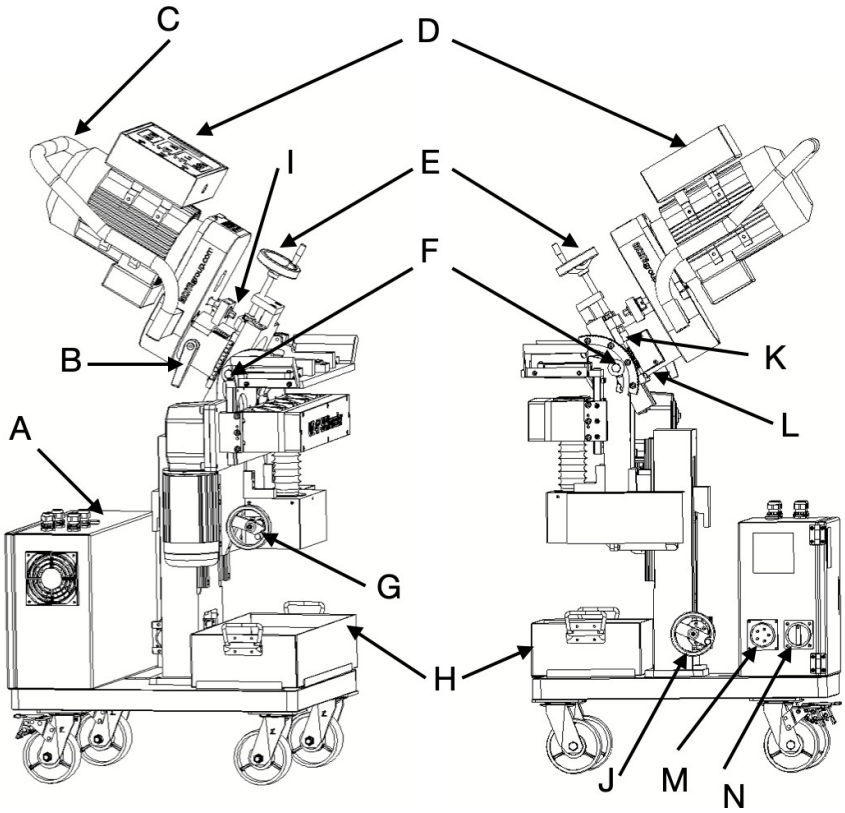

Machine - description of controls

A.	Distribution box
B	Machining tool position locking lever (cutting depth) + scale.
C.	Control handle
D.	Control panel
E.	Cross feed control
F.	Bevel angle adjustment locking screws
G.	Manual feed unit pressure control
H.	Chip collection tray.
I.	Cutting depth adjustment.
J	Working height adjustment of the machining unit.
K	Bevel angle adjustment screw
L	Cross feed locking screws
M	Connection socket
N	Main switch

5.3. Preliminary settings UZ47 Skillmaster

(Applies to all available applications and uses)

Caution:

Wear work gloves when adjusting. Operations must be performed on a machine that is stationary and disconnected from the power supply.

Before starting work, it will be necessary to make the following adjustments:

5.3.1. Material preparation

The material being machined must be placed on a suitable work table or supports so that the edge of the sheet metal is positioned at the required distance from the table or supports, so that the feed unit does not come into conflict with the legs of the work table.

5.3.2 Work axis adjustment options

The UZ47 Skillmaster machine allows the tool position to be adjusted in 3 axes, see Figure 5.3.1.

Fig. 5.3.1.

Position	Name
A.	Material removal setting
B.	Tool cross feed
C.	Machining angle setting

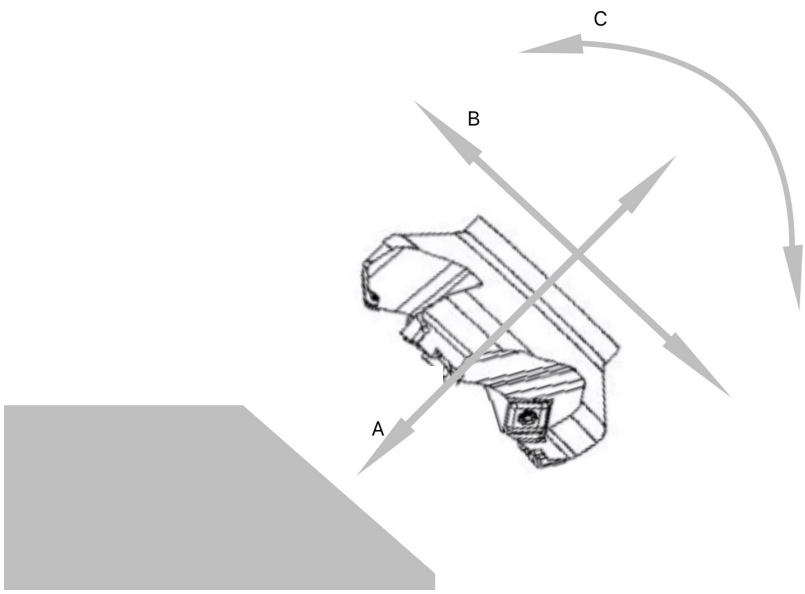

5.3.3. Adjusting the bevel angle

The machining angle can range from 0° to 90°.
Proceed as follows when adjusting:

- Loosen the locking screws (position F in Fig. 5.2.2.) located on both sides of the machine near the bevel angle adjustment scale.
- Turn the shaft of the working angle adjustment mechanism (position K in Fig. 5.2.2.). Occasionally, it is necessary to gently push the unit in the direction of the desired tilt angle adjustment with your hand. In other words, relieve the load on the machining unit.
- You can read the set angle value on the scale located on the right side of the machine, right next to the locking screw.
- Once the desired value has been reached, tighten the locking screws on the sides (position F in Fig. 5.2.2.) properly.

Important:
If the angle adjustment mechanism cannot be operated smoothly, this may be due to insufficiently loosened screws (position F in Fig. 5.2.2.) or dirt clogging the adjustment mechanism. In this case, clean the mechanism with compressed air or a suitable brush.

5.3.4. Setting the zero value:

To set the correct feed rate, it is always necessary to set the so-called zero point (the point where the cutter first touches the material) before starting machining.
This zero point will be our reference point for further setting of the cutting depth.

Proceed as follows:

- Set the desired machining angle.
- Loosen the screw lever, securing the feed setting (position B in Fig. 5.2.2.).
- Use the retraction adjustment mechanism (position I, Fig. 5.2.2) to move the cutting tool completely out of the machining area. The tool must not be in contact with the workpiece when you position the machine correctly on the edge of the material.
- Use the workpiece auto-clamping deactivation button (position H, Fig. 5.2.1) to set the feed unit to a position that allows the workpiece to be inserted into the machine. Or, conversely, to allow the machine to be placed on the clamped workpiece.
- Position the machine on the sheet metal to be machined anywhere along the length of the material so that the vertical and horizontal rulers are flush with the edge of the material to be machined along their entire length.
- Turn on the milling motor (position A, Fig. 5.2.1.).
- Loosen the screw lever, securing the removal setting (position B, Fig. 5.2.2.).
- Using the feed adjustment mechanism (position I, Fig. 5.2.2.), gradually move the milling cutter towards the material until it comes into contact with the material. You will hear the typical sound of the milling cutter catching on the material. At this point, the zero point for the given angle is set (Fig. 5.3.2.).
- Finally, tighten the screw lever to secure the feed adjustment (position B, Fig. 5.2.2.).

Fig. 5.3.2.

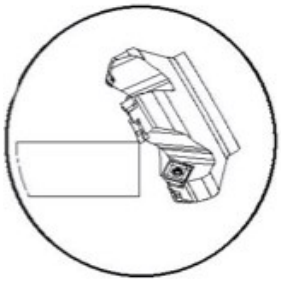

6. Application

6.1. BEVELLING - preparation of weld surfaces

The most common application in the preparation of weld surfaces. The typical range of angles for chamfering is 15° to 50°. To set the angle, proceed as follows:

6.1.1. Setting the bevel angle

To set the bevel angle, proceed as described in chapter 5.3.3.

6.1.2. Setting the zero value

To set the zero point, proceed as described in chapter 5.3.4.

6.1.3. Calculation of the cutting plan and settings

It is always necessary to start from the drawings and apply them to the machine setting processes.
From the drawings, which are usually available for the planned bevel, we can obtain the height and angle of the bevel.

Fig. 6.1.4.a

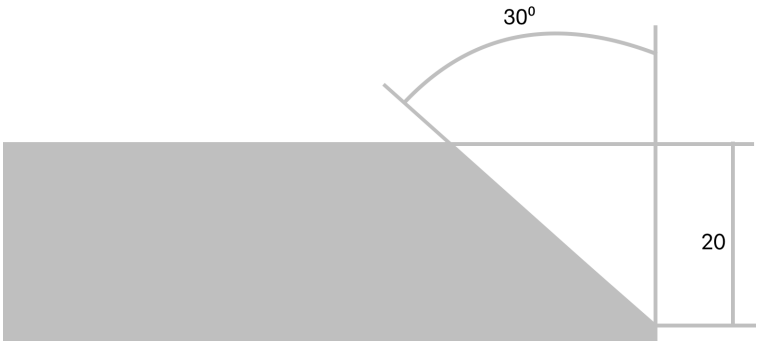

The machine has a scale showing the extension of the cutting tool in millimeters (Fig. 6.1.4.b.). In other words, it shows the depth of the cutter into the material in the axis perpendicular to the desired bevel angle (dimension A, Fig. 6.1.4.c.).The scale is located on the spindle body, on the right side of the machine (position B, Fig. 5.2.2.).

Fig. 6.1.4.b.

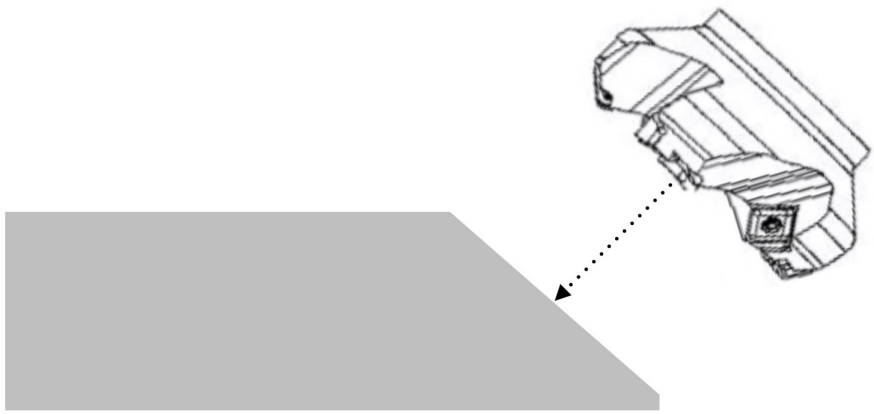

For correct adjustment, it is necessary to calculate how many mm we need to extend the cutter, in other words, what will be the depth of removal (dimension A, Fig. 6.1.4.c.) relative to the zero point in order to achieve the required chamfer size.

Fig. 6.1.4.c.

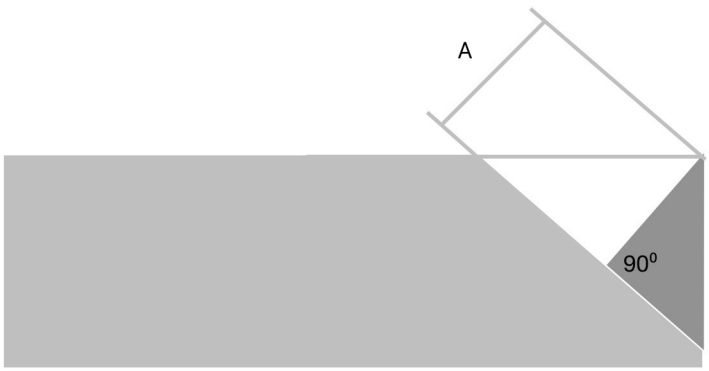

Important: To calculate the machining process, we recommend using the Bevelling Solver device (see figure below), which can be purchased separately for the UZ47 Skillmaster machine, Art. No. 1900. Or we will use freely available application for a triangle calculation using a smartphone, and we will apply the calculation manually.

For Android

For iOS

After calculating the example in Figure 6.1.4.a, we find that the height of the cut is 10 mm. See Figure 6.1.4.d. The UZ47 Skillmaster machine is capable of cutting approximately 3-5 mm in a single cut. From the above, we can compile a cutting plan to create a sample example:

Step	Removal
1.	5mm
2.	5mm

In this particular case, we can achieve the required bevel in two steps. Fig. 6.1.4.d.

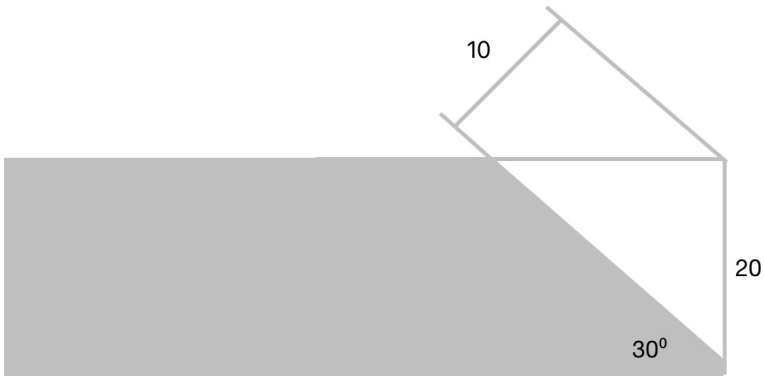

Important: The recommended maximum removal is 3-5mm. This value depends on many factors, such as the strength and hardness of the machined material, the wear of the VBD cutting inserts, and the feed rate. It will not always be possible to set the maximum 5mm. Always proceed with caution and take into account the current conditions!

Important: It may be necessary to change the cross feed setting. For more information on cross feed, see sections 5.3.2. or 6.3.3.

Important: The correct setting of the removal rate requires the prior determination of the zero point. Without this presetting, there is a risk of incorrect adjustment of the removal rate and damage to the cutter.

6.2. FACING - Machining the front edge of a sheet metal

When using the Facing application, we only machine the front edge of the workpiece at a zero bevel angle. This application is useful, for example, if you need to create a right angle on the edge of the workpiece or remove slag after burning the edge, for example, when preparing for future surface treatment of the edge or other processing. Typically, we remove only 0.5-3 mm of material with this application.

6.2.1. Setting the working angle

A working angle of 0° is required for the facing application. To set the working angle, proceed as described in chapter 5.3.3.

6.2.2. Setting the zero value

To set the zero point, proceed as described in chapter 5.3.4.

6.2.3. Calculation of the cutting plan and settings

When facing, set the desired removal directly on the cutting tool extension scale in millimeters. The scale is located on the spindle body, on the right side of the machine (position B in Fig. 5.2.2.).

Important: The recommended maximum removal is 3-5 mm. This value depends on many factors, such as the strength and hardness of the machined material, the wear of the VBD cutting inserts, and the feed rate. It will not always be possible to set the maximum 5 mm. Always proceed with caution and take into account the current conditions!

Important: It may be necessary to change the cross feed setting. For more information on cross feed, see sections 5.3.2. or 6.3.3.

Important: To set the removal correctly, you must first set the zero point. Without this presetting, there is a risk of incorrect removal adjustment and damage to the cutter.

6.3. CLADDING REMOVAL - removal of material from the top side of the sheet.

Cladding Removal is mainly used when welding clad sheets, where it is necessary to remove the top layer (typically stainless steel) in order to expose and subsequently bevel the bottom layer (typically ordinary steel) and weld it into a single unit. The removed top layer of the workpiece material is then welded back on.

When applying Cladding Removal, it is necessary to use a special milling tool designed for use with rectangular cutting inserts, order no. 4706.

6.3.1. Setting the bevel angle

A working angle of 90° is required for Cladding Removal. To set the working angle, proceed as described in section 5.3.3.

6.3.2. Setting the zero value

To set the zero point, proceed as described in chapter 5.3.4.

6.3.3. Setting the transverse feed

The UZ47 Skillmaster machine allows you to set the position of the tool in the transverse direction. The controls are located on the machine (positions L and E, Fig. 5.2.2.). This function is mainly used in the Cladding Removal application to set the A value, see Fig. 6.3.3.1, and also in the J-Bevel application.

Fig. 6.3.3.1.

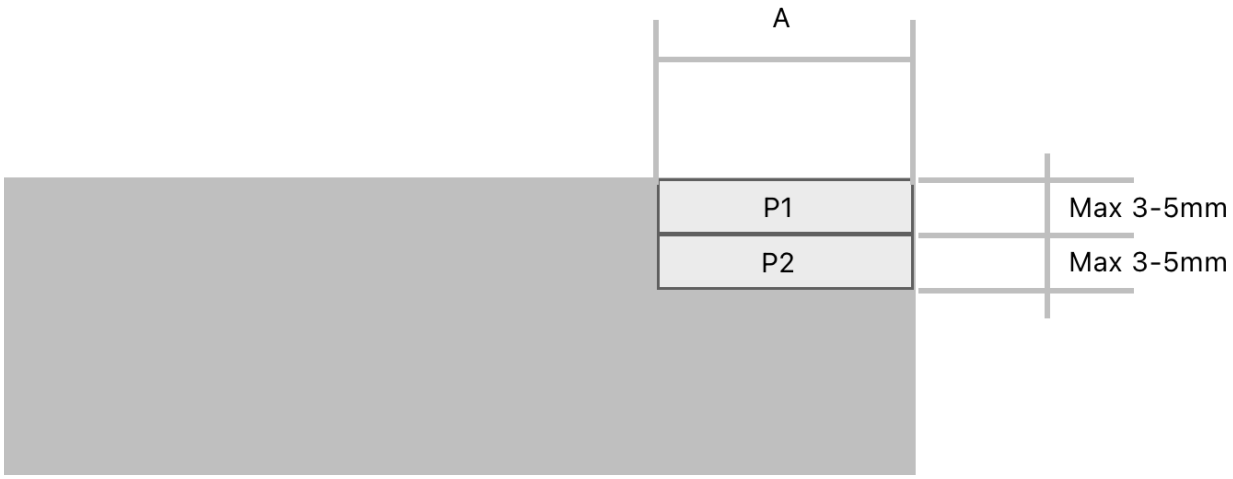

6.3.4. Calculation of the cutting plan and settings

When using the Cladding Removal application, set the desired removal directly on the cutting tool extension scale in millimeters. The scale is located on the spindle body, on the right side of the machine (position B, Fig. 5.2.2.).

Important: The prerequisite for correct removal setting is the prior determination of the zero point. Without this presetting, there is a risk of incorrect removal adjustment and damage to the milling cutter.

Important: The recommended maximum feed rate is 3-5 mm. This value depends on many factors, such as the strength and hardness of the machined material, the wear of the VBD cutting inserts, and the feed rate. It will not always be possible to set the maximum 5 mm. Always proceed with caution and take into account the current conditions!

6.4. Tapering - Unifying different sheet metal thicknesses

The application of flares is mainly used to unify different sheet metal thicknesses, typically in the manufacture of bridge structures. Flares contribute to the strength properties of the structure and eliminate the risk of fatigue damage at the joint.

6.4.1. Setting the bevel angle

When applying bevels, a working angle of 70°+ is usually required. To set the working angle, proceed as described in section 5.3.3.

6.4.2. Setting the zero value

To set the zero point, proceed as described in chapter 5.3.4.

6.4.3. Calculation of the cutting plan and settings

Applying bevels is almost identical to applying chamfers. Proceed as described in section 6.1.3.

Important: It is likely that you will need to change the cross feed settings. For more information on cross feed, see chapter 5.3.2. or 6.3.3.

6.5. J-BEVEL - special bevel profile shape.

J-Bevel bevels are mainly used for welding thick-walled sheets. They allow easier access with the welding nozzle to the root of the weld. They also significantly reduce the amount of welding material required compared to a standard V-bevel. Last but not least, it helps reduce the risk of fatigue cracks. J-Bevel allows the use of automated welding methods.

When using J-Bevel, it is necessary to use a special milling tool designed for circular cutting inserts of the required radius (dimension R, Fig. 6.5.3.1.).
Milling head for R6mm - order no. 4708 Milling head for R8mm - order no. 4710

6.5.1. Setting the bevel angle

When using J-Bevel, a working angle of 15° is usually required. To set the working angle, proceed as described in chapter 5.3.3.

6.5.2. Setting the zero value

To set the zero point, proceed as described in chapter 5.3.4.

6.5.3. Setting the cross feed

The UZ47 Skillmaster machine allows you to set the position of the tool in the transverse direction. The controls are located on the machine (positions L and E, Fig. 5.2.2.). This function is essential for the J-Bevel application. The transverse feed is used to set the height of the pen (position C, Fig. 6.5.3.1.). We recommend performing a test bevel on a sample with the same material thickness as the final workpiece. Gradually achieve the desired pen height and bevel shape and record the values of the cross feed scale positions and depth of cut settings.

Fig. 6.5.3.1.

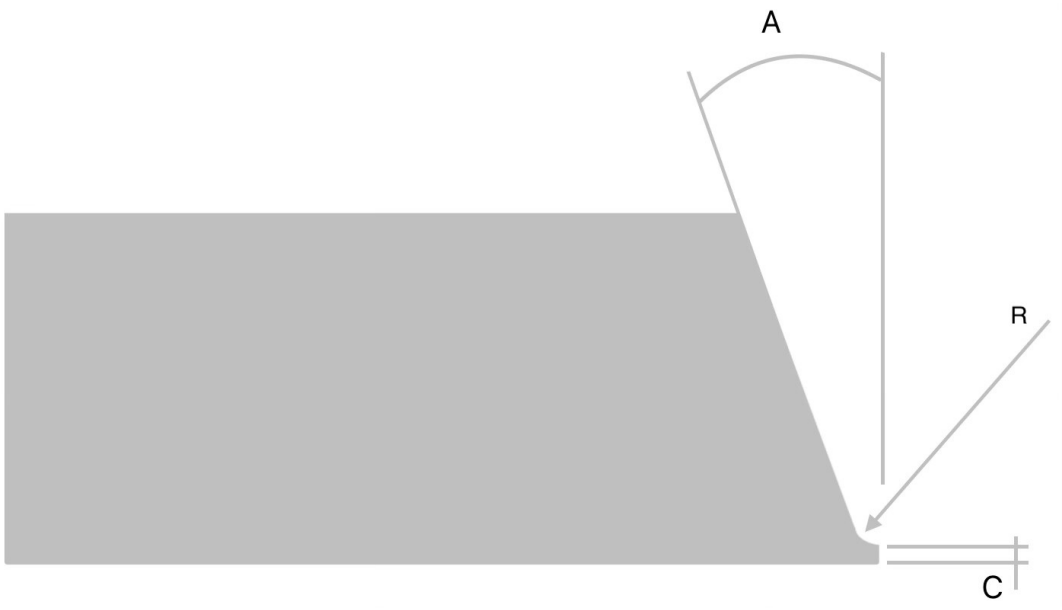

6.5.4. Calculation of the cutting plan and settings

The J-bevel application is almost identical to the beveling application. Follow the same procedure as in section 6.1.3. If the bevel can be made in one step, secure the settings achieved during the test on the sample and then proceed to bevel the final piece.

If the bevel requires the process to be divided into several steps, proceed in accordance with the maximum bevel depth per cut (3 mm - 5 mm) and terminate the process when the recorded values are reached.

Important: The correct setting of the removal rate requires the prior determination of the zero point. Without this presetting, there is a risk of incorrect adjustment of the removal rate and damage to the cutter.

Important: The recommended maximum removal is 3-5 mm. This value depends on many factors, such as the strength and hardness of the machined material, the wear of the VBD cutting inserts, and the feed rate. It will not always be possible to set the maximum 5 mm. Always proceed with caution and take into account the current conditions!

Important: When using J-Bevel, you will need to change the cross feed settings. For more information on cross feed, see sections 5.3.2, 6.3.3, and 6.5.3.

7. Machining

Proceed as follows:

- Set up the machine for the given application, see previous chapters.
- Set the first cut by loosening the screw lever, securing the cut setting (position B, Fig. 5.2.2.), set the desired removal amount using the control screw (position I, Fig. 5.2.2.), and retighten the screw lever and the removal setting lock (position B, Fig. 5.2.2.).
- Position the machine at the beginning of the sheet metal. The machining direction is from left to right in the standard position. Adjust the optimum height of the machining unit relative to the workpiece using the control wheel (position J, Fig. 5.2.2.).
- Use the auto-clamping deactivation button (position H, Fig. 5.2.1) to set the feed unit to a position where the machine can be freely guided onto the clamped workpiece. The feed unit wheels should not clamp the workpiece at this point.
- Guide the machine onto the material until you reach a position where the beginning (edge) of the workpiece is still in front of and outside the milling cutter and, at the same time, both the vertical and horizontal guide rulers are touching the edge of the workpiece and are in line with the edge of the sheet metal being machined. Now press the auto-clamping button (position I, Fig. 5.2.1) and wait until the sheet is completely and properly clamped.
- Turn on the milling cutter and feed motors (positions A and G, Fig. 5.2.1) and set the feed speed to approximately 1/4 - 1/2 of the maximum feed speed.
- Slowly move the machine onto the workpiece and, if necessary, adjust the position of the machine by pulling the appropriate handles until the machine is fully positioned on the workpiece with the entire length of the guide rulers and all feed rollers. The machine must move onto the sheet metal with the guide rules in a straight line with the edge of the workpiece, and these rules must be in constant contact with it.
- Once the machine is fully aligned with the workpiece, the feed speed can be increased. The feed speed is not fixed and must be adjusted according to the condition of the cutting inserts, the quality of the material, and the size of the cut.
- Before reaching the end of the machined sheet metal and before moving the machine off the workpiece, we recommend reducing the feed rate. It always depends on the current situation.
- In the case of machining involving repeated material removal, move the machine back to the beginning of the sheet after leaving it, adjust the settings for the next cut (according to the previous chapters and the specific application), and continue machining until you achieve the desired result.

Important: During chamfering, a situation may arise where the machine does not move smoothly over the workpiece or tends to slide off the workpiece. This happens when the sheet metal being machined is poorly positioned on the supports or when the floors in the workplace are in poor condition. It is necessary to level the sheet metal against the floor in the workplace. Complications can also arise when there are obstacles on the machined material. For example, in the form of weld residues or residues from cutting the edges of the workpiece by burning. In this case, it is necessary to clean the material first with a suitable tool.

Important: Depending on the application and the amount of material removal, there may be an increased tendency for the machine and mechanical parts to become clogged with chips from machining. This situation must be prevented. It is necessary to continuously remove chips with a suitable tool or compressed air (a hook for removing chips is supplied with the machine). Otherwise, there is a risk of blocking the machining unit, overloading the machine, and damaging some of its parts.

Important: If the machining unit becomes blocked despite these precautions, switch off the machine and remove it from the material without changing the cutting depth setting. Clean the relevant parts of the machine of chips, loosen the mechanical parts, and then reinstall the machine on the workpiece at the point where work was interrupted. If you have done everything correctly, it will be possible to continue working without restriction.

8. MAINTENANCE AND ADJUSTMENT

8.1. Recommendations

Important:
Maintenance personnel must be qualified technicians.

Never work on moving parts of the machine, even with tools or other objects.

It is strictly forbidden to remove, modify, or tamper with the safety devices on the machine. The manufacturer declines all responsibility for the safety of the machine in the event of such actions.

Always use original spare parts (see Chapter 10. Spare Parts).

Caution:
Always wear work gloves when performing maintenance on the machine. Perform maintenance operations on the machine when it is at a standstill and disconnected from the power supply.

Before each work shift and then as needed during the shift, clean the machine, tools, and moving parts with compressed air.

Caution:
When using compressed air for cleaning purposes, wear safety goggles and never use a pressure exceeding 2 bar.

Caution:
Use the tools supplied with the machine for adjustment and maintenance operations.

8.2. Removing the cutter and replacing the cutting blades

Caution:
Wear work gloves when replacing tools.

The UZ47 Skillmaster uses its own design of end mills with square, rectangular, and circular cutting blades for machining. We strongly recommend using only original milling heads and cutting blades manufactured by N.KO Machines. If tools other than the original ones are used, the manufacturer is not liable for any injury or damage to the machine.

To make full use of the cutting inserts, it is necessary to rotate the cutting insert when it becomes blunt. A total of up to 4 cutting sides are available on each insert. In the case of circular inserts, you can only rotate the inserts.
The condition of the cutting inserts must be checked regularly and, if worn, they must be rotated or replaced in good time.

8.2.3. Removing the milling head

- Disconnect the machine from the power supply.
- Using the bevel angle and depth adjustment mechanisms, set the milling head to a position where you have the best access to it and enough space to remove it from the machine.
- Secure the spindle against rotation. The milling heads are equipped with a hole on the circumference of the tool body. The set of tools supplied with the machine includes a steel pin that fits into the hole on the side of the tool. Use this pin to lock the head against rotation when loosening the milling head mounting screw.
- Remove the screw and pull the milling head off the spindle by hand.

8.2.4. Replacing or rotating the cutting blades

- Place the milling head on a suitable surface.
- Use the supplied wrench to loosen the cutting insert screw (Fig. 8.2.4.2. pos. A) and rotate or replace it.
- Reinstall the milling cutter.

Important: Keep all parts of the milling head (blades, blade screws, cutter screw) a n d the spindle clean.
Otherwise, there is a risk of incorrect seating of the cutting blades and their reduced service life, or blockage of the milling head on the spindle and subsequent difficulties during the next disassembly.

Fig. 8.2.4.2.

8.3. Replacing and tensioning the drive belt

The UZ47 Skillmaster machine is equipped with a belt for transferring power from the motor to the spindle. This belt also serves as a safety device in case of machine overload.
In practice, a situation may arise where this belt breaks. When replacing the belt, proceed as follows:

- Disconnect the machine from the power supply
- Loosen and remove the screws on the belt cover and remove the cover (Fig. 8.3.1, item A).
- Loosen the motor flange screws (Fig. 8.3.1, item C).
- Loosen the belt tensioning screw and release the belt (Fig. 8.3.1, item B).
- Replace the drive belt with a new one.
- Tension the belt using the tensioning screw (Fig. 8.3.1, item B).
- Reassemble the machine in reverse order, see above, and tighten the screws.
- Check the machine for proper operation.

Fig. 8.3.1.

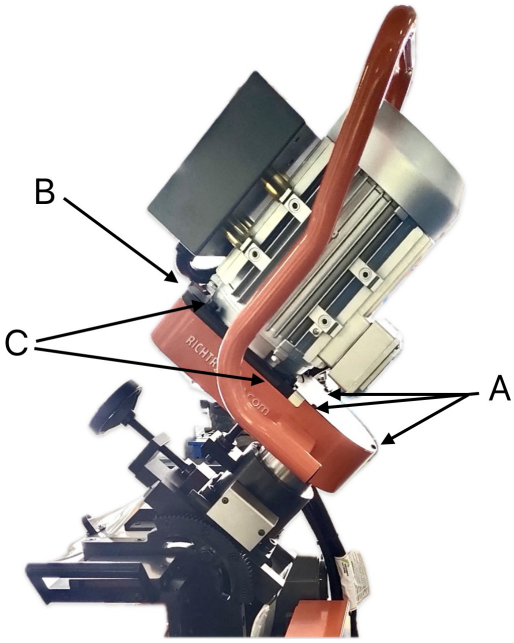

When operating the machine in areas with particularly hazardous influences AD and above, it is necessary to provide increased protection of the machine against electric shock!

Electrical energy - in the event of a malfunction, the electrical energy must be switched off immediately.
Work on the electrical equipment of the machine may only be carried out by an electrical specialist or persons subordinate to him who are supervised by this specialist to ensure that the work is carried out in accordance with electrical regulations.

Všechny díly, na kterých se provádí údržba a opravy nesmí být pod napětím. Tyto odpojené díly se musí dvoupólovým měřícím přístrojem zkontrolovat, že nejsou pod napětím, pak tyto díly uzemnit a vedlejší díly, které jsou pod napětím izolovat!

Vypnutí napětí provést hlavním vypínačem v poloze „0“, odpojení stroje od napětí.

Elektrické vybavení je nutno pravidelně kontrolovat popřípadě přezkoušet. Nedostatky, volné spoje, přiškvařené kabely se musí okamžitě vyměnit.

9. SPARE PARTS

9.1. How to order spare parts

Spare parts orders must include the following information:
- Machine type.
- Serial number.
- Photograph of the required part and a brief description.
- Number of pieces.

UZ47 Skillmaster

1000 Base Part

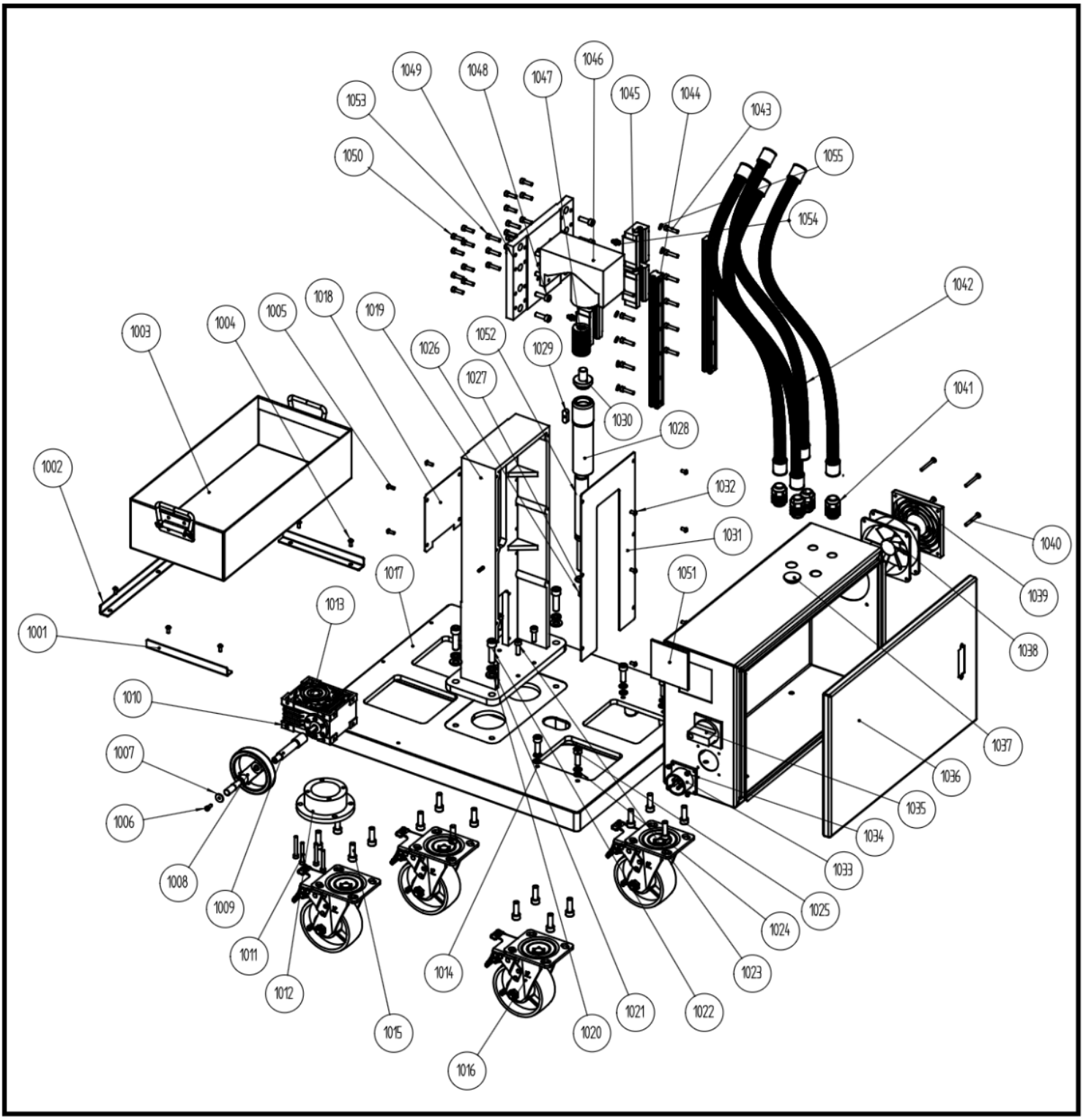

UZ47 Skillmaster

1000 Base Part

Number	Fig	Part Name	Pcs		Number	Fig	Part Name	Pcs
4700,1001	1001	Side check rails	2		4700,1029	1029	Pin	1
4700,1002	1002	Front check rails	1		4700,1030	1030	Press block	1
4700,1003	1003	Chip Box	1		4700,1031	1031	Back dam-board	1
4700,1004	1004	Screw	7		4700,1032	1032	Screw	6
4700,1005	1005	Screw	4		4700,1033	1033	Aviation plug	1
4700,1006	1006	Screw	1		4700,1034	1034	Screw	4
4700,1007	1007	Spacer	1		4700,1035	1035	Switch	1
4700,1008	1008	Handwheel	1		4700,1036	1036	Electro cabinet Cover	1
4700,1009	1009	Handle shaft	1		4700,1037	1037	Indicator light	1
4700,1010	1010	Screw	2		4700,1038	1038	Fan	1
4700,1011	1011	Screw	4		4700,1039	1039	Fan Cover	1
4700,1012	1012	Reducer base	1		4700,1040	1040	Screw	4
4700,1013	1013	Reducer	1		4700,1041	1041	Connector	3
4700,1014	1014	Rubber pad	4		4700,1042	1042	Cable	4
4700,1015	1015	Screw	16		4700,1043	1043	Screw	12
4700,1016	1016	Wheel	4		4700,1044	1044	Guide rail	2
4700,1017	1017	Base	1		4700,1045	1045	linear slider	4
4700,1018	1018	Front dam-board	1		4700,1046	1046	Connection frame	1
4700,1019	1019	Main support frame	1		4700,1047	1047	Spring	1
4700,1020	1020	Spacer	4		4700,1048	1048	Screw	8
4700,1021	1021	Spring washer	4		4700,1049	1049	Guide rail plate	1
4700,1022	1022	Screw	4		4700,1050	1050	Screw	16
4700,1023	1023	Screw	4		4700,1051	1051	Ventilation cover	1
4700,1024	1024	Spacer	4		4700,1052	1052	Lifting lead screw	1
4700,1025	1025	Screw	4		4700,1053	1053	Screw	6
4700,1026	1026	Screw	1		4700,1054	1054	Oil nozzle	4
4700,1027	1027	Gasket	1		4700,1055	1055	Cap	12
4700,1028	1028	Lifting Nut	1					

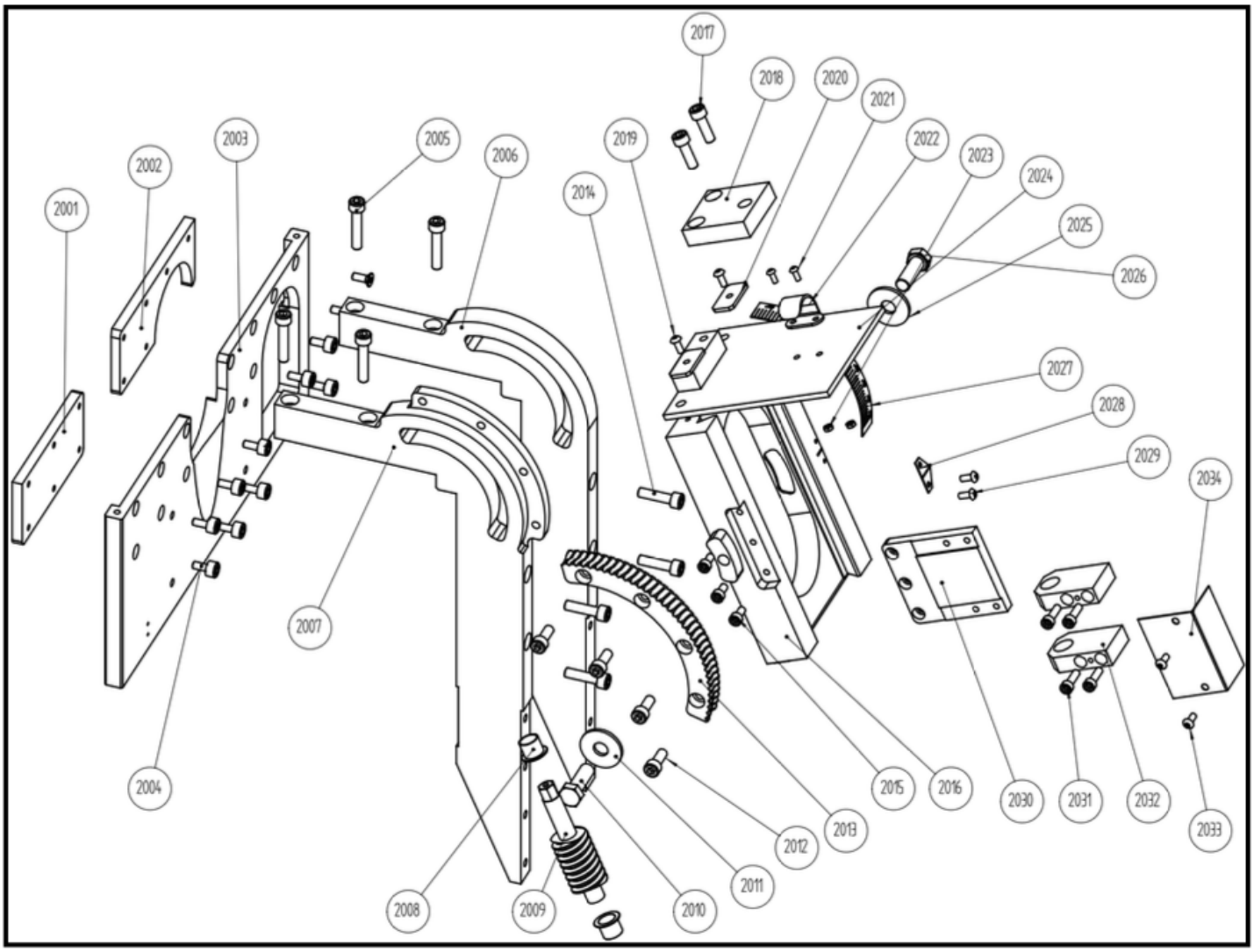
2001
2002
2003
2004
2005
2006
2007
2008
2009
2010
2011
2012
2013
2014
2015
2016
2017
2018
2019
2020
2021
2022
2023
2024
2025
2026
2027
2028
2029
2030
2031
2032
2033
2034

UZ47 Skillmaster

2000 Lifting Support Part

Number	Fig	Part Name	Pcs		Number	Fig	Part Name	Pcs
4700,2001	2001	Right wear-resistant plate	1		4700,2019	2019	Screw	2
4700,2002	2002	Left wear-resistant plate	1		4700,2020	2020	Front rubber press pad	2
4700,2003	2003	Lift main rail plate	1		4700,2021	2021	Screw	2
4700,2004	2004	Screw	12		4700,2022	2022	Hook	1
4700,2005	2005	Screw	4		4700,2023	2023	Screw	1
4700,2006	2006	Side support plate (left)	1		4700,2024	2024	Rubber curtain	1
4700,2007	2007	Side support plate (right)	1		4700,2025	2025	Gasket	1
4700,2008	2008	Copper sleeve	2		4700,2026	2026	Screw	1
4700,2009	2009	Worm gear	1		4700,2027	2027	Angle scale	1
4700,2010	2010	Screw	1		4700,2028	2028	Arrow	1
4700,2011	2011	Spacer	1		4700,2029	2029	Screw	2
4700,2012	2012	Screw	4		4700,2030	2030	Mounting plate	1
4700,2013	2013	Angle turbine	1		4700,2031	2031	Screw	4
4700,2014	2014	Screw	4		4700,2032	2032	Munting block	2
4700,2015	2015	Screw	3		4700,2033	2033	Screw	2
4700,2016	2016	Feed support plate	1		4700,2034	2034	Cover plate	1
4700,2017	2017	Screw	2					
4700,2018	2018	Lead screw mounting plate	1					

3000 Lower Roller Frame Part

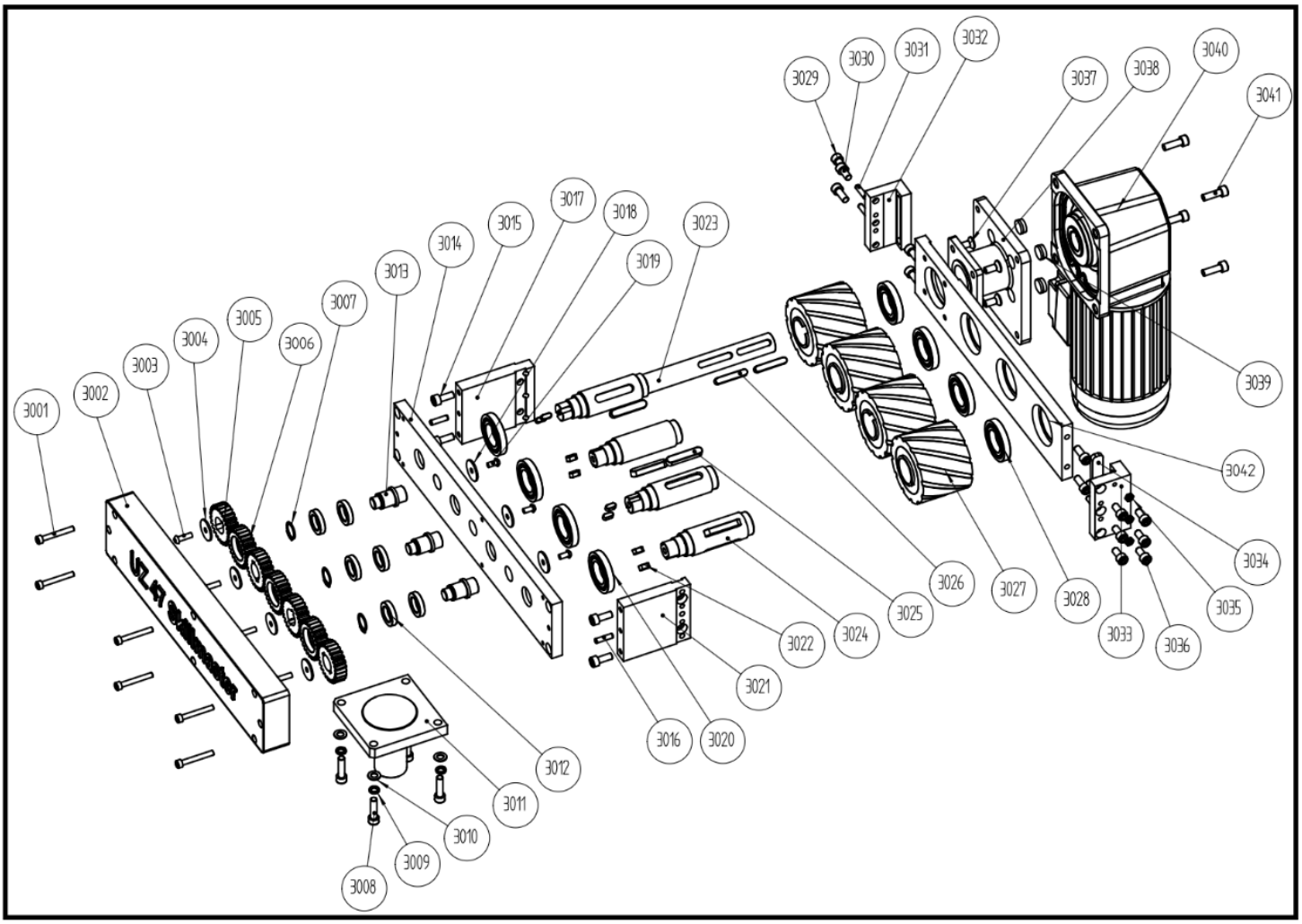

UZ47 Skillmaster

3000 Lower Roller Frame Part

Number	Fig	Part Name	Pcs	Number	Fig	Part Name	Pcs
4700,3001	3001	Screw	6	4700,3022	3022	Pin	8
4700,3002	3002	Gear cover plate	1	4700,3023	3023	Drive shaft of the reducer	1
4700,3003	3003	Screw	4	4700,3024	3024	Gear drive shaft	3
4700,3004	3004	Spacer	4	4700,3025	3025	Pin	4
4700,3005	3005	Drive gear	4	4700,3026	3026	Pin	2
4700,3006	3006	Gear	3	4700,3027	3027	Big Roller	4
4700,3007	3007	Spacer	3	4700,3028	3028	Bearing	4
4700,3008	3008	Screw	4	4700,3029	3029	Screw	4
4700,3009	3009	Spring washer	4	4700,3030	3030	Screw	6
4700,3010	3010	Pin	4	4700,3031	3031	Pin	4
4700,3011	3011	shaft nut assemble	1	4700,3032	3032	Guide rail block (right)	1
4700,3012	3012	Copper sleeve	6	4700,3033	3033	Guide rail block(left)	1
4700,3013	3013	shaft	3	4700,3034	3034	Wear-resistant strip	1
4700,3014	3014	Supporting plate	1	4700,3035	3035	Nut	3
4700,3015	3015	Screw	8	4700,3036	3036	Screw	3
4700,3016	3016	Pin	2	4700,3037	3037	Screw	4
4700,3017	3017	Side dam-board	1	4700,3038	3038	Reducer mounting plate	1
4700,3018	3018	Spacer	3	4700,3039	3039	Sealing Cap	4
4700,3019	3019	Screw	3	4700,3040	3040	Reducer	1
4700,3020	3020	Bearing	4	4700,3041	3041	Screw	4
4700,3021	3021	Side dam-board	1	4700,3042	3042	Supporting plate	1

UZ47 Skillmaster

4000 Upper Roller Frame Part

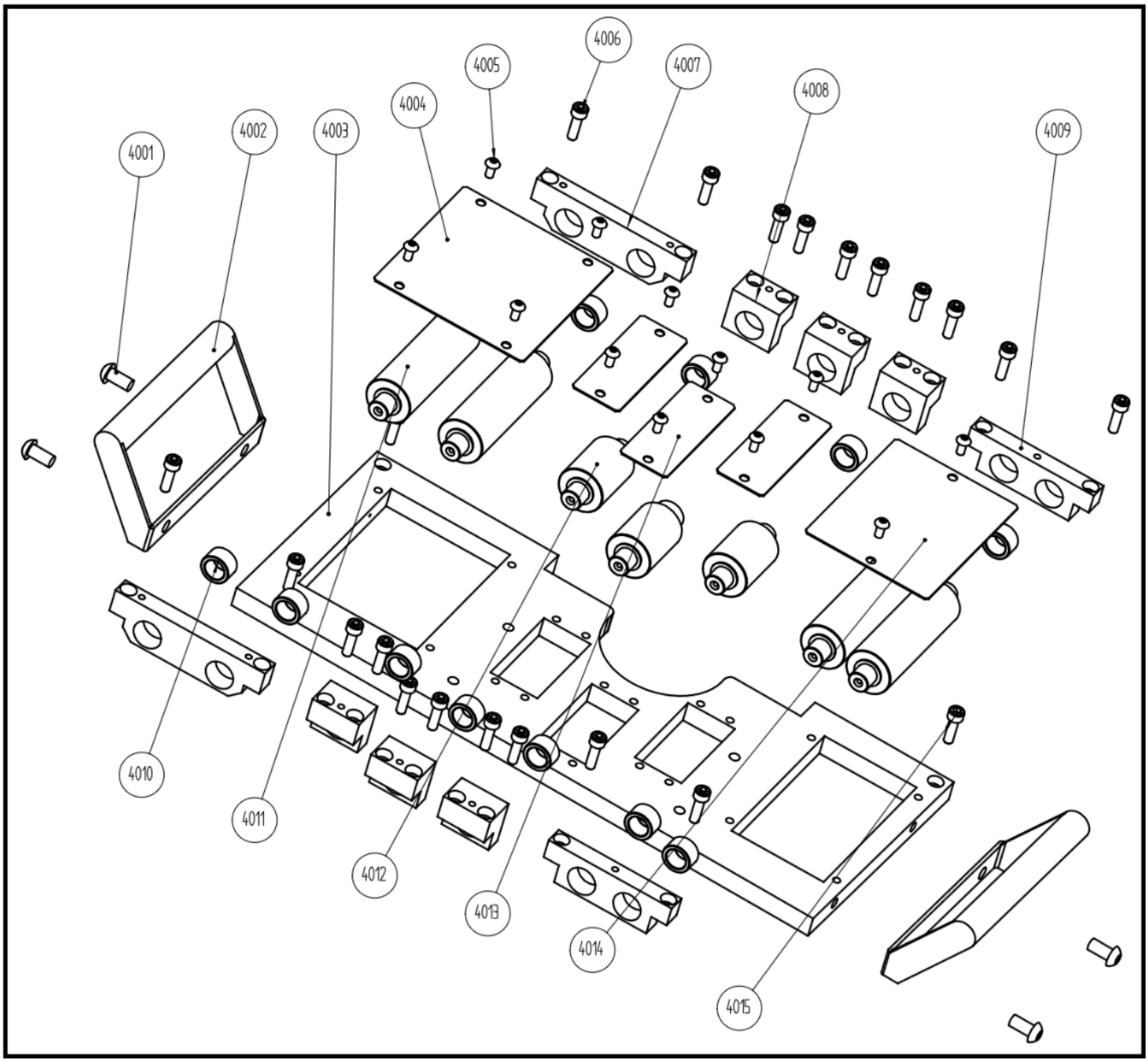

UZ47 Skillmaster

4000 Upper Roller Frame Part

Number	Fig	Part Name	Pcs
4700,4001	4001	Screw	4
4700,4002	4002	Hand shank	2
4700,4003	4003	Upper roller plate	1
4700,4004	4004	Plate	1
4700,4005	4005	Screw	12
4700,4006	4006	Screw	20
4700,4007	4007	Bracket	2
4700,4008	4008	Bracket	6
4700,4009	4009	Bracket	2
4700,4010	4010	Copper sleeve	14
4700,4011	4011	Rubber Wheel（Long）	4
4700,4012	4012	Rubber Wheel（Short）	3
4700,4013	4013	Plate	3
4700,4014	4014	Plate	1
4700,4015	4015	Screw	2

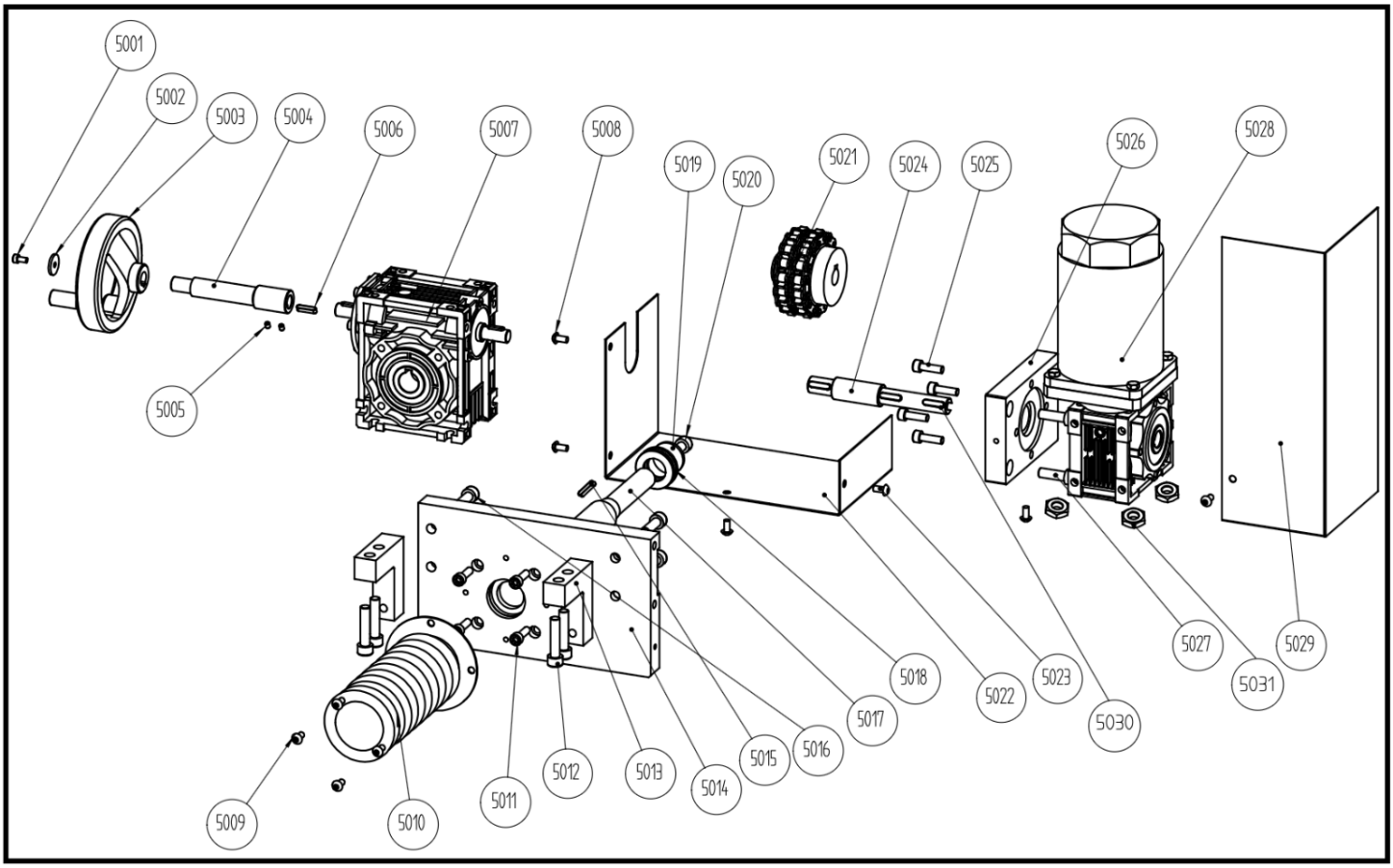
5001
5002
5003
5004
5006
5007
5008
5019
5020
5021
5024
5025
5026
5028
5005
5018
5022
5023
5027
5029
5031
5030
5017
5016
5015
5014
5013
5012
5011
5010
5009

UZ47 Skillmaster

5000 Clamp System Part

Number	Fig	Part Name	Pcs		Number	Fig	Part Name	Pcs
4700,5001	5001	Screw	1		4700,5027	2027	Screw	4
4700,5002	5002	Spacer	1		4700,5028	5028	Reducer	1
4700,5003	5003	Handwheel	1		4700,5029	5029	Motor shield	1
4700,5004	5004	Shaft	1		4700,5030	5030	Pin	3
4700,5005	5005	Screw	2		4700,5031	5031	Nut	4
4700,5006	5006	Pin	1					
4700,5007	5007	Reducer	1					
4700,5008	5008	Screw	2					
4700,5009	5009	Screw	4					
4700,5010	5010	Dustproof cover	1					
4700,5011	5011	Screw	4					
4700,5012	5012	Screw	4					
4700,5013	5013	Lift bracket	2					
4700,5014	5014	Lift support plate	1					
4700,5015	5015	Pin	1					
4700,5016	5016	Screw	4					
4700,5017	5017	Lifting screw	1					
4700,5018	5018	Bearing	1					
4700,5019	5019	Gasket	1					
4700,5020	5020	Screw	1					
4700,5021	5021	Chain coupling	1					
4700,5022	5022	Shield	1					
4700,5023	5023	Screw	4					
4700,5024	5024	Connecting shaft	1					
4700,5025	5025	Screw	4					
4700,5026	5026	Mounting plate	1					

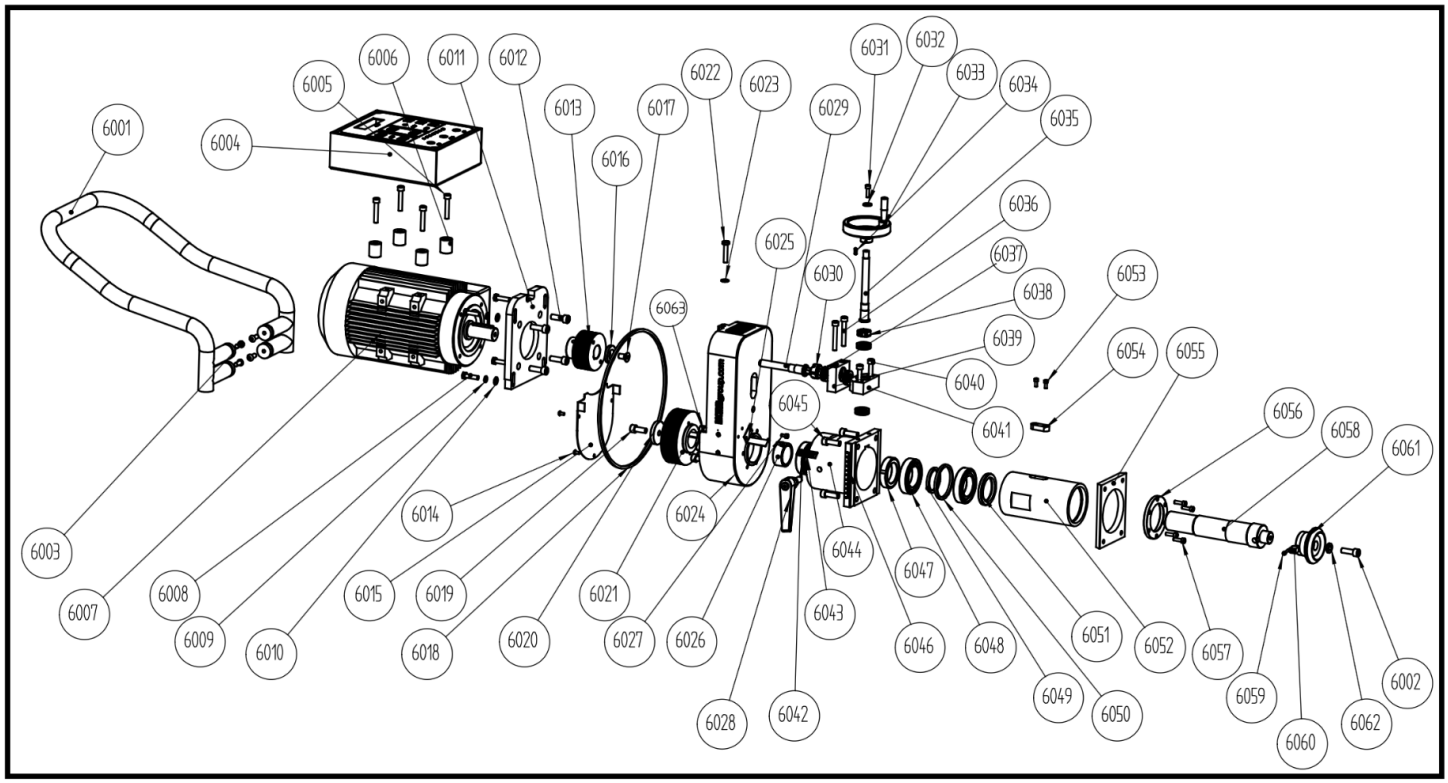
6001
6002
6003
6004
6005
6006
6007
6008
6009
6010
6011
6012
6013
6014
6015
6016
6017
6018
6019
6020
6021
6022
6023
6024
6025
6026
6027
6028
6029
6030
6031
6032
6033
6034
6035
6036
6037
6038
6039
6040
6041
6042
6043
6044
6045
6046
6047
6048
6049
6050
6051
6052
6053
6054
6055
6056
6057
6058
6059
6060
6061
6062
6063

UZ47 Skillmaster

6000 Motor Drive Part

Number	Fig	Part Name	Pcs		Number	Fig	Part Name	Pcs
4700,6001	6001	Handle bar	1		4700,6033	6033	Handwheel	1
4700,6002	6002	Screw	1		4700,6034	6034	Pin	1
4700,6003	6003	Screw	4		4700,6035	6035	Lead screw	1
4700,6004	6004	Dashboard	1		4700,6036	6036	Screw	2
4700,6005	6005	Screw	4		4700,6037	6037	Bearing	4
4700,6006	6006	Spacer	4		4700,6038	6038	Lock nut	1
4700,6007	6007	Motor	1		4700,6039	6039	Lead screw plate	1
4700,6008	6008	Screw	4		4700,6040	6040	Screw	2
4700,6009	6009	Spring washer	4		4700,6041	6041	Lead screw plate	1
4700,6010	6010	Spacer	4		4700,6042	6042	Bearing	1
4700,6011	6011	Mounting plate	1		4700,6043	6043	Scale	1
4700,6012	6012	Screw	4		4700,6044	6044	Feed guide sleeve	1
4700,6013	6013	Belt pulley	1		4700,6045	6045	Screw	4
4700,6014	6014	Screw	3		4700,6046	6046	Angle scale	1
4700,6015	6015	Cover	1		4700,6047	6047	Lock nut	1
4700,6016	6016	Pressing plate	1		4700,6048	6048	Bearing	2
4700,6017	6017	Screw	1		4700,6049	6049	Bearing spacer	1
4700,6018	6018	Belt	1		4700,6050	6050	Bearing spacer	1
4700,6019	6019	Screw	1		4700,6051	6051	Sealing ring	1
4700,6020	6020	Lock sheet	1		4700,6052	6052	Main shaft sleeve	1
4700,6021	6021	Main shaft wheel	1		4700,6053	6053	Screw	2
4700,6022	6022	Screw	1		4700,6054	6054	Pin	1
4700,6023	6023	Spacer	1		4700,6055	6055	Feed guide block	1
4700,6024	6024	Belt cabinet	1		4700,6056	6056	sealed cap	1
4700,6025	6025	Scale indicator	1		4700,6057	6057	Screw	6
4700,6026	6026	Bearing sleeve	1		4700,6058	6058	Main shaft	1
4700,6027	6027	Screw	2		4700,6059	6059	Screw	2
4700,6028	6028	Lock handle	1		4700,6060	6060	Pin	2
4700,6029	6029	Lead screw	1		4700,6061	6061	Milling head	1
4700,6030	6030	Lock nut	1		4700,6062	6062	Spacer	1
4700,6031	6031	Screw	1		4700,6063	6063	Screw	6
4700,6032	6032	Spacer	1					

A copy of this manual is supplied with every UZ47 Skillmaster machine.

All rights reserved.
No part of this publication may be reproduced without the prior consent of N.KO

Manufacturer's and Distributor's Address:
N.KO spol. s r.o.
a Member of Richtr Group
Táborská 398/22
293 01 Mladá Boleslav
Czech Republic – Europe Union
Phone: +420 326 772 001 fax: +420 326 774 279
email:nko@nko.cz

USA Distributor's Address:
BEVELER USA INC.
Business Office, Workshop, Warehouse (PA)
(a Member of Richtr Group)
511 Parkway View Dr,
PiQsburgh, PA 15205
8:00 am to 4:00 pm EST
Toll Free Number: 1-800-973-1138
info@bevelerusa.com